GUIDE SPECIFICATIONS

EV Series R-410A

GENERAL

Units shall be performance certified to ISO standard 13256-1 for Water Loop Heat Pump, Ground Water Heat Pump and Ground Loop Heat Pump applications. Units shall be Underwriter Laboratories (UL and ULc) listed for safety on all models. Each unit shall be run tested at the factory. Each unit shall be pallet mounted and stretch wrapped. The units shall be manufactured in an ISO9001:2000 certified facility.

The units shall be warranted by the manufacturer against defects in materials and workmanship for a period of one year on all parts, and 5 years on the compressor.

The units shall be designed to operate with entering fluid temperatures between 50°F (10°C) and 110°F (43.3°C) in cooling and temperatures between 25°F (-3.9°C) and 80°F (27°C) in heating as manufactured by FHP Manufacturing in Fort Lauderdale, Florida.

CASING & CABINET

The cabinet shall be fabricated from heavy-gauge steel finished with Galvalume® plus, an aluminum-zinc alloy with a clear acrylic coating for additional corrosion protection. The interior shall be insulated with ½" (12.7mm) thick, multi density, coated, glass fiber. All units shall allow sufficient service access to replace the compressor without unit removal. One blower and two compressor compartment access panels shall be removable with supply and return ductwork in place. A duct collar shall be provided on the supply air opening. A four sided hinged filter rack (2 sided, non-hinged on horizontal units) with a full 1" (25.4mm) duct collar and 1" (25.4mm) thick filters shall be provided with each unit. The units shall have an insulated divider panel between the air handling section and the compressor section to minimize the transmission of compressor noise, and to permit service testing without air bypass. Units shall have a stainless steel condensate drain pan.

REFRIGERATION CIRCUITS

All units shall contain a sealed R-410A refrigerant circuit including a hermetic scroll compressor, bi-directional thermal expansion valve metering device, finned tube air-to-refrigerant heat exchanger, refrigerant reversing valve, coaxial tube-in-tube water to refrigerant heat exchanger, liquid line filter drier and service ports. Compressor shall be mounted on rubber vibration isolators. Compressor motors shall be equipped with overload protection. Refrigerant reversing valves shall be pilot operated sliding piston type with replaceable encapsulated magnetic coils energized only during the cooling cycle. The finned tube coil shall be constructed of lanced aluminum fins not exceeding fourteen fins per inch bonded to rifled copper tubes in a staggered pattern not less than three rows deep and have a working pressure of no less than 450 PSIG (3100 kPa). Coils shall have a baked polyester enamel coating for protection against most airborne chemicals. Coil end plates shall be aluminum. The coaxial water-to-refrigerant heat exchanger shall be constructed of a convoluted copper (optional cupronickel) inner tube and steel outer tube with a designed refrigerant working pressure of no less than 450 PSIG (3100 kPa) and a designed water side working pressure of no less than 400 PSIG (2750 kPa). The water-to-refrigerant heat exchanger shall be insulated to prevent condensation at low fluid temperatures.

FAN MOTOR & ASSEMBLY

The fan shall be direct drive centrifugal forward curved type with a dynamically balanced wheel. The housing and wheel shall be designed for quiet low velocity operation. The fan housing shall be removable from the unit without disconnecting the supply air ductwork for servicing of the fan motor. The fan motor shall be three speed PSC type. The motor shall be permanently lubricated and have thermal overload protection.

ELECTRICAL

Controls and safety devices will be factory wired and mounted within the unit. Controls shall include fan relay, compressor contactor, 24V transformer, reversing valve coil and solid state lock-out controller (UPM). The UPM controller shall include the following features: diagnostic LED's, low pressure bypass time delay (to prevent nuisance low pressure lock-outs during operation with low fluid temperatures), anti short cycle time delay, random start time delay and one time intelligent reset. When the safety controls are activated the lock-out circuit shall reset itself the first time. If the safety controls are subsequently activated, then the lock-out circuit shall disable the compressor until it is reset at the thermostat or main circuit breaker to prevent compressor operation during fault conditions. A lock-out indicating terminal shall be provided in the low voltage circuit. Safety devices include a low pressure cutout set a 20 PSIG (140 kPa) for loss of charge protection (freezestat and/or high discharge gas temperature sensor is not acceptable) and a high pressure cutout control set at 600 PSIG (4100 kPa).

A terminal block with screw terminals shall be provided for control wiring. An optional condensate overflow switch shall be factory installed to stop compressor operation if drain pan overflow is eminent. An optional energy management relay to allow unit control by an external source shall be factory installed.

PIPING

Supply, return water and condensate drain connections shall be brass female pipe thread fittings and mounted flush to cabinet exterior with optional stainless steel, Braided hose kit with swivel connectors.

INTERNAL ELECTRIC HEAT

208/230-1-60 volt units shall be equipped with optional factory installed internal electric resistance heat for axillary and emergency heat. Electric heater must be Underwriter's Laboratories (UL and ULc) approved for safety when installed in the unit. External heater packages or heater packages not specifically listed for use with the unit are unacceptable. Electric heater packages shall include a heater collar mounted to the blower outlet, individual thermal overload protected heater elements no greater than 5kW each and magnetic contactors. Heater packages shall have a separate power supply connection from the compressor and this power supply shall also power the unit blower motor and control transformer for safe operation.

HEAT RECOVERY PACKAGE

208/230 volt units shall be equipped with a optional factory installed internal heat recovery kit for domestic hot water production. This kit shall include an internally protected pump, double walled coaxial water-to-refrigerant heat exchanger, 140°F (60°C) hot water temperature limit switch and a on/off switch/ circuit breaker.

LOOP PUMP PACKAGE - CONSULT FACTORY

208/230-1-60 volt units shall be equipped with an optional factory installed ground loop pump kit. This kit shall include a 1/6 HP loop pump, isolation valves and a set of purge connections for purging and pressurizing the ground loop with the unit in place. The pump, all piping and valves shall be internal to the unit.

FHP Manufacturing Co.
601 N.W. 65th Court
Fort Lauderdale, FL 33309
Phone: (954) 776-5471
Fax: (800) 776-5529
http://www.fhp-mfg.com

EV/ES Series Vertical Dimensions

MODEL	A Width	B Depth	C Height	D	E	F	G	H	J	K	M R/A Duct Flg Width	N R/A Duct Flg Height	P Filter Rack Height	Q	Condenser Water Connections	Recommended Replacement Nominal Filter Size
EV/ES018	21.50	21.50	40.25	11.75	13.75	3.75	7.00	5.25	8.00	14.25	17.50	16.00	18.00	4.13	3/4" F.P.T.	20 X 20 X 1
EV/ES024	21.50	21.50	40.25	11.75	13.75	3.75	7.00	5.25	8.00	14.25	17.50	16.00	18.00	4.13	3/4" F.P.T.	20 X 20 X 1
EV/ES030, 036	21.50	26.00	47.25	13.75	15.75	6.13	5.25	5.25	8.00	15.25	22.00	22.25	24.00	4.00	3/4" F.P.T.	24 X 24 X 1
EV/ES042	24.00	32.75	47.25	15.75	15.75	8.38	4.75	5.25	8.00	16.25	28.50	22.25	24.00	3.50	1" F.P.T.	24 X 30 X 1
EV/ES048	24.00	32.75	47.25	15.75	15.75	8.38	5.50	5.25	8.00	16.25	28.50	22.25	24.00	4.00	1" F.P.T.	24 X 30 X 1
EV/ES060	26.00	33.25	51.25	17.75	17.75	7.13	6.25	5.25	8.00	18.50	28.50	22.25	24.00	4.00	1" F.P.T.	24 X 30 X 1
EV/ES070	26.00	33.25	58.25	17.75	17.75	7.13	6.25	5.25	8.00	18.50	28.50	30.25	32.00	4.00	1" F.P.T.	16 X 30 X 1 (2)

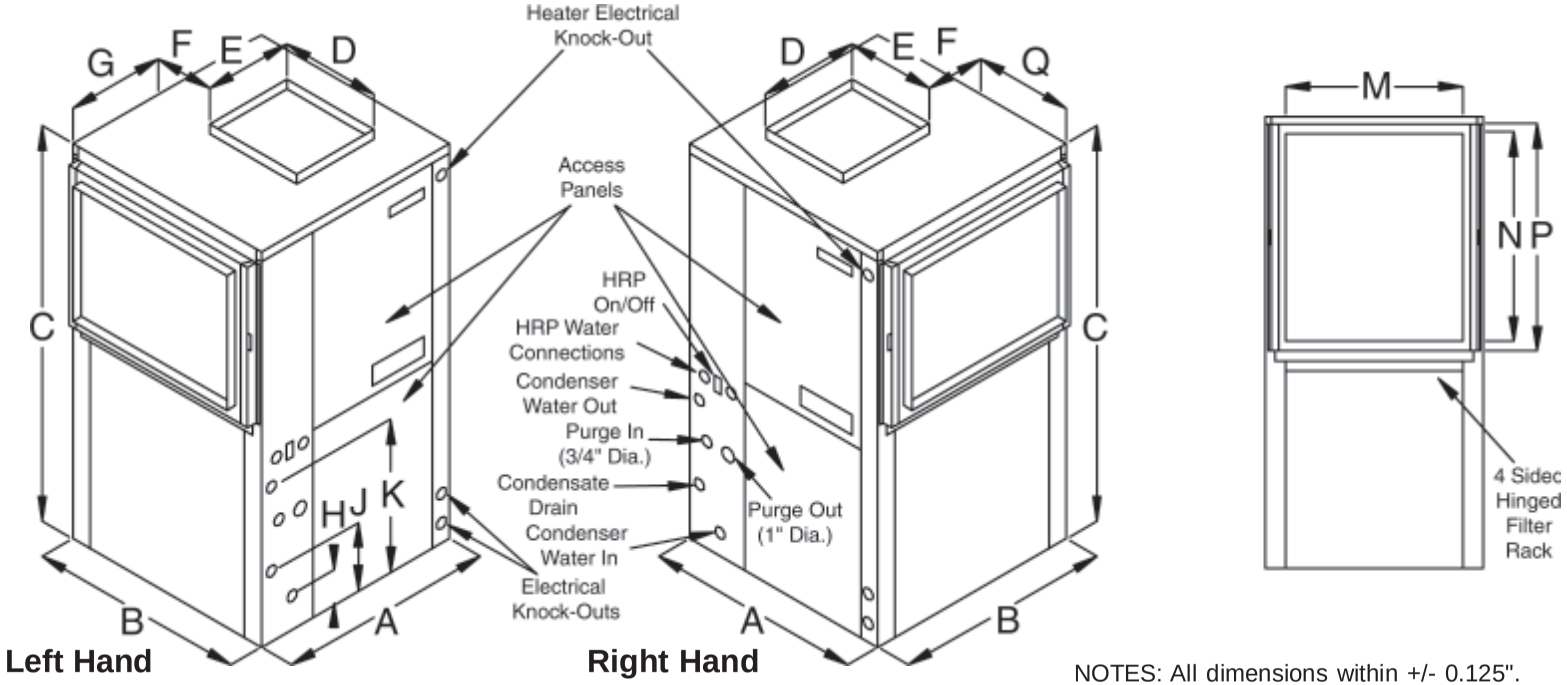

Left Hand Return (FLT)

Right Hand Return (FRT)

NOTES: All dimensions within +/- 0.125".
All condensate drain connections are 3/4" FPT.
All Heat Recovery Kit connections are 1/2" FPT.
Internal electric heat available on 208-230/1/60 top discharge units only
Internal Loop Pump available on 208-230 volt units only.
Internal Heat Recovery Kit available on 208-230 volt units only.
Specifications subject to change without notice.

FHP Manufacturing Co.
601 N.W. 65th Court
Fort Lauderdale, FL 33309
Phone: (954) 776-5471
Fax: (800) 776-5529
http://www.fhp-mfg.com

EV/ES Series Horizontal Dimensions

MODEL	A	B	C	D	E	F	G	H	J	K	M	N	P	Q	R	T	Condenser	Recommended
	Width	Depth	Height		R/A Duct Flg Width										Filter Rack Height	R/A Duct Flg Height	Water Connections	Replacement Nom. Filter Size
EV/ES018	25.50	45.00	21.75	2.00	19.25	23.75	5.25	14.25	4.31	11.75	5.00	13.75	4.31	5.00	20.50	18.50	3/4" F.P.T.	20 X 20 X 1
EV/ES024	25.50	43.00	21.75	2.00	20.00	21.00	5.25	14.25	4.31	11.75	5.00	13.75	4.31	5.00	20.50	18.50	3/4" F.P.T.	20 X 20 X 1
EV/ES030,036	26.00	54.50	21.75	2.00	30.00	22.50	5.25	15.25	4.50	13.75	3.00	15.75	4.50	3.00	20.50	18.50	3/4" F.P.T.	18 X 20 X 1 (2)
EV/ES042	30.00	68.00	21.75	2.50	33.50	32.00	5.25	16.25	5.81	15.75	3.00	15.75	5.81	3.00	20.50	18.50	1" F.P.T.	18 X 20 X 1 (2)
EV/ES048	30.00	68.00	21.75	2.50	33.50	32.00	5.25	16.25	5.81	15.75	3.00	15.75	5.81	3.00	20.50	18.50	1" F.P.T.	18 X 20 X 1 (2)
EV/ES060	30.00	68.00	21.75	2.50	33.50	32.00	5.25	18.50	7.66	17.75	2.00	17.75	7.66	2.00	20.50	18.50	1" F.P.T.	18 X 20 X 1 (2)
EV/ES070	30.00	78.00	21.75	2.50	44.00	31.50	5.25	18.50	7.66	17.75	2.00	17.75	7.66	2.00	20.50	18.50	1" F.P.T.	20 X 24 X 1 (2)

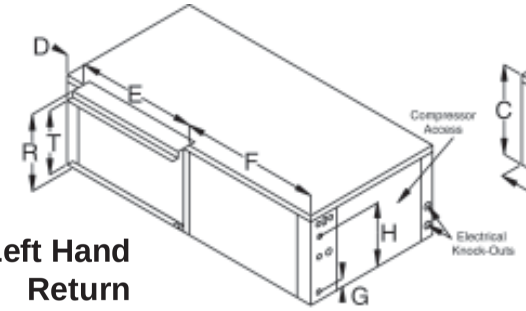

Left Hand Return

Left Hand Return End Blow (FLE)

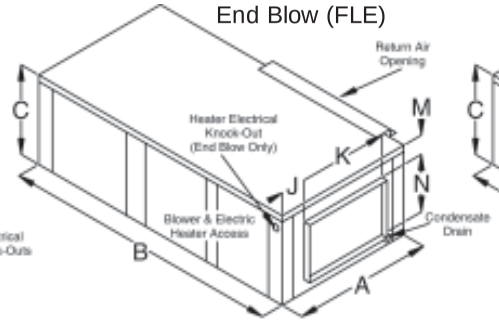

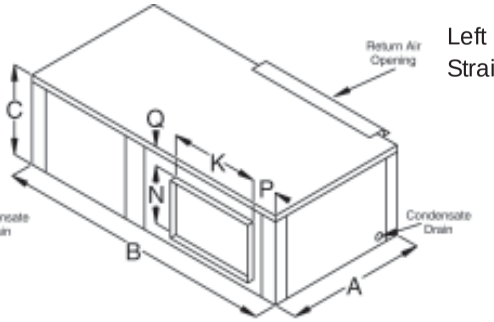

Left Hand Return Straight Through (FLS)

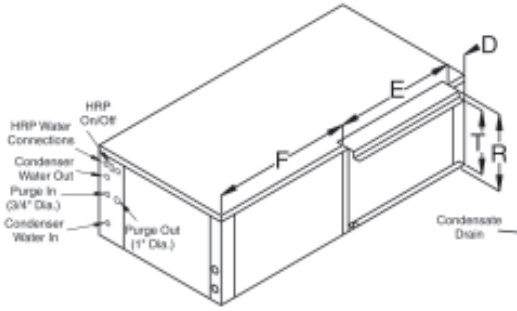

Right Hand Return

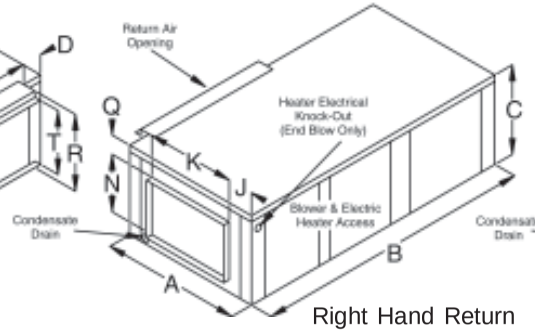

Right Hand Return End Blow (FRE)

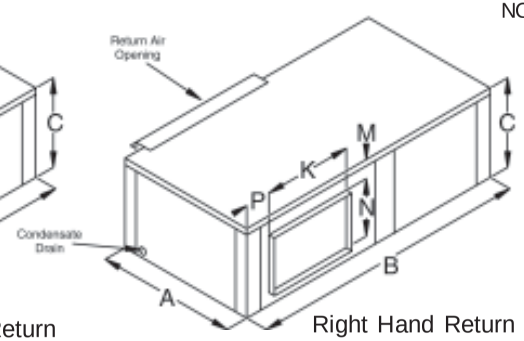

Right Hand Return Straight Through (FRS)

NOTES:
- All dimensions within +/- 0.125".
- All condensate drain connections are 3/4" FPT.
- All Heat Recovery connections are 1/2" FPT.
- Internal electric heat available on 208-230 volt units only
- Internal Loop Pump available on 208-230 volt units only.
- Internal Heat Recovery Kit available on 208-230 volt units only.
- Units can be field converted between end blow and straight through supply air configurations.
- Specifications subject to change without notice.

FHP Manufacturing Co.
601 N.W. 65th Court
Fort Lauderdale, FL 33309
Phone: (954) 776-5471
Fax: (800) 776-5529
http://www.fhp-mfg.com

EV/ES Series Counterflow Dimensions

MODEL	A	B	C	D	E	F	G	H	J	K	M	N	P	Condenser	Recommended
	Width	Depth	Height	Blower Opening	Blower Opening						R/A Duct Flg Width	R/A Duct Flg Height	Filter Rack Height	Water Connections	Replacement Nominal Filter Size
EV/ES018	21.50	21.50	40.25	9.25	9.63	5.00	5.13	5.50	15.00	10.13	18.00	16.00	18.00	3/4" F.P.T.	20 X 20 X 1
EV/ES024	21.50	21.50	40.25	9.25	9.63	5.00	5.13	6.50	15.50	10.13	18.00	16.00	18.00	3/4" F.P.T.	20 X 20 X 1
EV/ES030, 036	21.50	26.00	47.25	9.25	10.25	8.38	5.00	7.00	17.00	9.75	22.00	22.00	24.00	3/4" F.P.T.	24 X 24 X 1
EV/ES042	24.00	32.75	47.25	9.25	10.25	11.63	4.50	7.50	18.50	9.25	28.00	22.00	24.00	1" F.P.T.	24 X 30 X 1
EV//ES048	24.00	32.75	47.25	10.75	11.50	11.13	6.88	7.50	18.50	8.75	28.00	22.00	24.00	1" F.P.T.	24 X 30 X 1
EV/ES060	26.00	33.25	51.25	12.00	12.50	10.63	5.00	7.00	20.25	10.50	28.00	22.00	24.00	1" F.P.T.	24 X 30 X 1
EV/ES070	26.00	33.25	58.25	12.00	12.50	10.63	5.00	7.00	20.25	10.50	28.00	30.00	32.00	1" F.P.T.	16 X 30 X 1 (2)

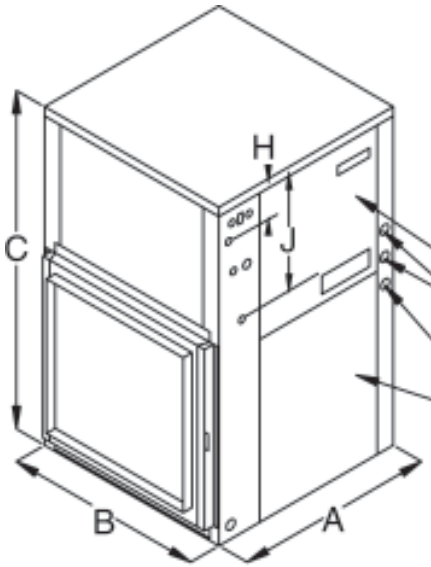

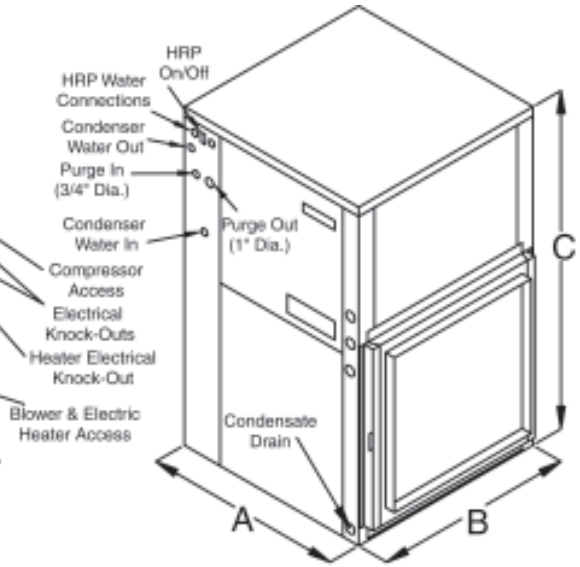

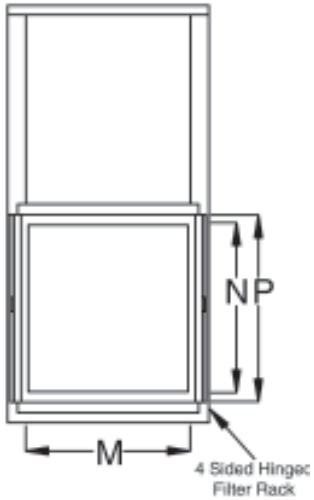

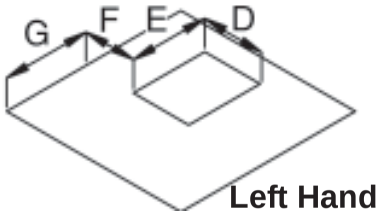

Left Hand Return (FLB)

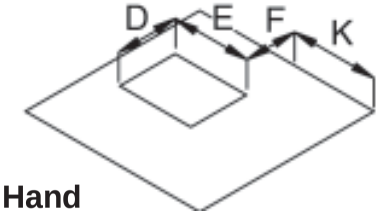

Right Hand Return (FRB)

NOTES: All dimensions within +/- 0.125".
All condensate drain connections are 3/4" FPT.
All Heat Recovery Kit connections are 1/2" FPT.
Internal electric heat available on 208-230/1/60 bottom discharge units only
Internal Loop Pump available on 208-230 volt units only.
Internal Heat Recovery Kit available on 208-230 volt units only.
Specifications subject to change without notice.

PACKAGED UNITS
SPECIFICATION DATA SHEET

FHP MANUFACTURING HIGH-EFFICIENCY WATER SOURCE HEAT PUMPS

EV018

ENVIRO-MISER

ELECTRICAL SPECIFICATIONS

Electrical Characteristics	Elect. Symbol	Compressor		Blower		Loop Pump		Min. Circuit Amps	Max. Fuse/ Breaker
		RLA	LRA	FLA	HP	FLA	HP		
208/230-1-60	-1	10.3	51.0	1.8	1/4	-	-	16.4	25
265-1-60	-2	7.1	44.0	1.6	1/4	-	-	10.5	15

MECHANICAL SPECIFICATIONS

Refrigerant: R-410A			
Air Coil			
Square Feet	Rows Deep	Tube O.D.	Fins/ Inch
2.12	3	3/8	14
Water Coil			
Type		Work Press	
Coaxial		450 psig	
Blower Size		Compr Type	
9x7 DD		Scroll	
Net Weight		Ship Weight	
184 lbs		196 lbs	

BLOWER PERFORMANCE

Available External Static Pressure (Inches of Water, Gauge. Wet Coil and Filter Included)												
Blower Speed	0.10	0.20	0.30	0.40	0.50	0.60	0.70	0.80	0.90	1.00	1.10	1.20
High	900	850	800	760	710	690	680	670	-	-	-	-
Medium	750	720	690	670	650	-	-	-	-	-	-	-
Low	670	650	-	-	-	-	-	-	-	-	-	-

ARI PERFORMANCE CERTIFIED ANSI/ARI/ASHRAE/ISO Standard 13256-1

c UL US

FLUID PRESSURE DROP

Fluid Flow (GPM)	Pressure Drop (FOH)	(PSIG)
2	0.86	0.37
3	1.78	0.77
4	2.99	1.29
6	6.20	2.68
8	10.40	4.50

ISO 13256-1 CERTIFIED PERFORMANCE DATA Rated at 650 CFM and 4.0 GPM

Water Loop				Ground Water				Ground Loop			
Cooling		Heating		Cooling		Heating		Cooling		Heating	
Capacity	EER	Capacity	COP	Capacity	EER	Capacity	COP	Capacity	EER	Capacity	COP
18,500	14.5	24,000	5.4	22,000	25.4	19,000	4.3	19,500	18.5	14,500	3.4

CAPACITY DATA All performance at 650 CFM and 4.0 GPM

COOLING

EFT Range (Standard) 45°F to 110°F

Entering Fluid Temp. (°F)	Entering Air Temp. (°F)	Total Capacity (MBtuH)	Sensible Capacity (MBtuH)	Sensible to Total Ratio	Power Input (kW)	Heat of Reject (MBtuH)	EER
50°	70°db 61°wb	19.49	12.51	0.64	0.80	22.24	24.3
60°		18.40	11.90	0.65	0.94	21.61	19.5
70°		17.30	11.33	0.65	1.08	20.98	16.0
85°		15.65	10.51	0.67	1.29	20.04	12.2
100°		14.01	9.73	0.69	1.49	19.10	9.4
50°	75°db 63°wb	20.90	14.99	0.72	0.81	23.65	25.9
60°		19.72	14.26	0.72	0.95	22.95	20.8
70°		18.55	13.58	0.73	1.09	22.25	17.1
85°		16.79	12.61	0.75	1.29	21.20	13.0
100°		15.02	11.68	0.78	1.50	20.15	10.0
50°	80°db 67°wb	22.95	16.56	0.72	0.81	25.73	28.2
60°		21.66	15.76	0.73	0.95	24.92	22.7
70°		20.37	15.01	0.74	1.09	24.11	18.6
85°		18.44	13.94	0.76	1.30	22.89	14.2
100°		16.51	12.91	0.78	1.51	21.68	10.9
50°	85°db 71°wb	25.00	18.15	0.73	0.82	27.80	30.5
60°		23.60	17.28	0.73	0.96	26.88	24.6
70°		22.20	16.45	0.74	1.10	25.96	20.2
85°		20.10	15.28	0.76	1.31	24.58	15.3
100°		18.00	14.16	0.79	1.52	23.20	11.8

HEATING

EFT Range (Standard) 25°F to 80°F

Entering Fluid Temp. (°F)	Entering Air Temp. (°F)	Total Capacity (MBtuH)	Power Input (kW)	Heat of Abs. (MBtuH)	COP
50°	60°	20.57	1.38	15.88	4.4
60°		23.25	1.38	18.52	4.9
70°		25.92	1.39	21.17	5.5
80°		28.59	1.40	23.82	6.0
50°	70°	19.46	1.40	14.68	4.1
60°		21.99	1.41	17.18	4.6
70°		24.51	1.42	19.68	5.1
80°		27.04	1.42	22.18	5.6
50°	80°	18.15	1.43	13.28	3.7
60°		20.51	1.44	15.60	4.2
70°		22.86	1.45	17.92	4.6
80°		25.21	1.45	20.25	5.1

LOW TEMP HEATING

Antifreeze Required

25°	60°	13.62	1.36	8.99	2.9
30°		14.93	1.36	10.29	3.2
40°		17.55	1.37	12.88	3.8
25°	70°	12.89	1.38	8.18	2.7
30°		14.13	1.38	9.41	3.0
40°		16.60	1.39	11.85	3.5
25°	80°	12.03	1.41	7.23	2.5
30°		13.19	1.41	8.36	2.7
40°		15.49	1.42	10.64	3.2

Units are complete packages containing an R-410A compressor, reversing valve, expansion valve metering device, and heat exchangers. Also included are safety controls: Overload protection for motors, high and low refrigerant pressure switches and a solid state lock-out circuit. Optional UL approved internal electric heater, factory installed with primary thermal overload protection and magnetic contactors (208/230-1-60 only). Optional UL approved internal Heat Recovery Package and/or Ground Loop Pump with purge connections available.

Performance based on ARI/ISO rated air flow, fluid flow and voltage. For conditions other than rated, consult the FHP EAD selection software. Due to variations in installation actual performance may vary marginally from tabulated values.

As a result of continuing research and development, specifications are subject to change without notice.

EV018ip6 mod2 Rev: 5-05

FHP MANUFACTURING COMPANY
601 N.W. 65th Court - Fort Lauderdale, FL 33309
Phone: (954) 776-5471 - Fax: (800) 776-5529
http://www.fhp-mfg.com

PACKAGED UNITS
SPECIFICATION DATA SHEET

FHP MANUFACTURING HIGH-EFFICIENCY WATER SOURCE HEAT PUMPS

EV024

ENVIRO-MISER

ELECTRICAL SPECIFICATIONS

Electrical Characteristics	Elect. Symbol	Compressor		Blower		Loop Pump		Min. Circuit Amps	Max. Fuse/ Breaker
		RLA	LRA	FLA	HP	FLA	HP		
208/230-1-60	-1	13.5	69.0	1.8	1/4	-	-	20.5	30
265-1-60	-2	11.5	61.0	1.6	1/4	-	-	16.0	30
208/230-3-60	-3	9.3	63.0	1.8	1/4	-	-	13.5	20
460-3-60	-4	4.5	27.0	0.9	1/4	-	-	6.6	15

MECHANICAL SPECIFICATIONS

Refrigerant: R-410A			
Air Coil			
Square Feet	Rows Deep	Tube O.D.	Fins/ Inch
2.12	3	3/8	14
Water Coil			
Type		Work Press	
Coaxial		450 psig	
Blower Size		Compr Type	
9x7 DD		Scroll	
Net Weight		Ship Weight	
194 lbs		206 lbs	

BLOWER PERFORMANCE

Available External Static Pressure (Inches of Water, Gauge. Wet Coil and Filter Included)

Blower Speed	0.10	0.20	0.30	0.40	0.50	0.60	0.70	0.80	0.90	1.00	1.10	1.20
High	900	850	800	760	710	690	680	670	-	-	-	-
Medium	750	720	690	670	650	-	-	-	-	-	-	-
Low	670	650	-	-	-	-	-	-	-	-	-	-

ARI PERFORMANCE CERTIFIED™ ANSI/ARI/ASHRAE/ISO Standard 13256-1

c UL US

FLUID PRESSURE DROP

Fluid Flow (GPM)	Pressure Drop (FOH)	(PSIG)
3	1.78	0.77
4	2.99	1.29
5	4.47	1.93
6	6.20	2.68
8	10.40	4.50

ISO 13256-1 CERTIFIED PERFORMANCE DATA Rated at 800 CFM and 5.0 GPM

Water Loop				Ground Water				Ground Loop			
Cooling		Heating		Cooling		Heating		Cooling		Heating	
Capacity	EER	Capacity	COP	Capacity	EER	Capacity	COP	Capacity	EER	Capacity	COP
25,000	13.0	32,500	4.2	29,500	20.3	26,500	3.6	27,000	15.0	20,500	3.1

CAPACITY DATA All performance at 800 CFM and 5.0 GPM

COOLING

EFT Range (Standard) 45°F to 110°F

Entering Fluid Temp. (°F)	Entering Air Temp. (°F)	Total Capacity (MBtuH)	Sensible Capacity (MBtuH)	Sensible to Total Ratio	Power Input (kW)	Heat of Reject (MBtuH)	EER
50°	70°db 61°wb	26.44	17.06	0.65	1.36	31.09	19.4
60°		25.08	16.32	0.65	1.54	30.33	16.3
70°		23.72	15.62	0.66	1.71	29.56	13.9
85°		21.68	14.65	0.68	1.97	28.41	11.0
100°		19.64	13.73	0.70	2.24	27.27	8.8
50°	75°db 63°wb	28.32	20.39	0.72	1.37	33.00	20.7
60°		26.87	19.50	0.73	1.55	32.14	17.4
70°		25.41	18.67	0.73	1.72	31.29	14.8
85°		23.23	17.51	0.75	1.98	30.00	11.7
100°		21.04	16.42	0.78	2.25	28.72	9.4
50°	80°db 67°wb	31.08	22.50	0.72	1.38	35.80	22.5
60°		29.48	21.52	0.73	1.56	34.80	18.9
70°		27.89	20.61	0.74	1.74	33.81	16.1
85°		25.49	19.34	0.76	2.00	32.32	12.7
100°		23.10	18.13	0.78	2.27	30.83	10.2
50°	85°db 71°wb	33.84	24.63	0.73	1.39	38.59	24.3
60°		32.10	23.57	0.73	1.57	37.46	20.4
70°		30.36	22.57	0.74	1.75	36.33	17.4
85°		27.76	21.18	0.76	2.02	34.64	13.8
100°		25.16	19.86	0.79	2.28	32.95	11.0

HEATING

EFT Range (Standard) 25°F to 80°F

Entering Fluid Temp. (°F)	Entering Air Temp. (°F)	Total Capacity (MBtuH)	Power Input (kW)	Heat of Abs. (MBtuH)	COP
50°	60°	28.17	2.19	20.69	3.8
60°		31.53	2.26	23.81	4.1
70°		34.90	2.34	26.93	4.4
80°		38.26	2.41	30.04	4.7
50°	70°	26.63	2.23	19.02	3.5
60°		29.81	2.30	21.94	3.8
70°		32.99	2.38	24.87	4.1
80°		36.16	2.45	27.79	4.3
50°	80°	24.82	2.28	17.04	3.2
60°		27.78	2.36	19.74	3.5
70°		30.74	2.43	22.44	3.7
80°		33.70	2.51	25.14	3.9

LOW TEMP HEATING

Antifreeze Required

25°	60°	19.37	2.01	12.51	2.8
30°		21.02	2.05	14.04	3.0
40°		24.32	2.12	17.09	3.4
25°	70°	18.32	2.05	11.34	2.6
30°		19.88	2.08	12.77	2.8
40°		22.99	2.16	15.63	3.1
25°	80°	17.08	2.09	9.94	2.4
30°		18.53	2.13	11.27	2.5
40°		21.44	2.21	13.91	2.8

Units are complete packages containing an R-410A compressor, reversing valve, expansion valve metering device, and heat exchangers. Also included are safety controls: Overload protection for motors, high and low refrigerant pressure switches and a solid state lock-out circuit. Optional UL approved internal electric heater, factory installed with primary thermal overload protection and magnetic contactors (208/230-1-60 only). Optional UL approved internal Heat Recovery Package and/or Ground Loop Pump with purge connections available.

Performance based on ARI/ISO rated air flow, fluid flow and voltage. For conditions other than rated, consult the FHP EAD selection software. Due to variations in installation actual performance may vary marginally from tabulated values.

As a result of continuing research and development, specifications are subject to change without notice.

EV024ip6 mod2 Rev: 02-08

FHP MANUFACTURING COMPANY
601 N.W. 65th Court - Fort Lauderdale, FL 33309
Phone: (954) 776-5471 - Fax: (800) 776-5529
http://www.fhp-mfg.com

PACKAGED UNITS
SPECIFICATION DATA SHEET

FHP MANUFACTURING HIGH-EFFICIENCY WATER SOURCE HEAT PUMPS

EV030

ENVIRO-MISER

ELECTRICAL SPECIFICATIONS

Electrical Characteristics	Elect. Symbol	Compressor		Blower		Loop Pump		Min. Circuit Amps	Max. Fuse/ Breaker
		RLA	LRA	FLA	HP	FLA	HP		
208/230-1-60	-1	13.5	69.0	1.8	1/4	-	-	20.9	30
265-1-60	-2	11.5	61.0	1.6	1/4	-	-	16.0	30
208/230-3-60	-3	9.3	63.0	1.8	1/4	-	-	13.5	20
460-3-60	-4	4.5	27.0	0.9	1/4	-	-	6.6	15

MECHANICAL SPECIFICATIONS

Refrigerant: R-410A			
Air Coil			
Square Feet	Rows Deep	Tube O.D.	Fins/ Inch
3.50	3	3/8	14
Water Coil			
Type		Work Press	
Coaxial		450 psig	
Blower Size		Compr Type	
9x7 DD		Scroll	
Net Weight		Ship Weight	
285 lbs		310 lbs	

BLOWER PERFORMANCE

Available External Static Pressure (Inches of Water, Gauge. Wet Coil and Filter Included)												
Blower Speed	0.10	0.20	0.30	0.40	0.50	0.60	0.70	0.80	0.90	1.00	1.10	1.20
High	1275	1210	1140	1060	980	900	820	720	-	-	-	-
Medium	1040	1010	970	920	860	790	730	-	-	-	-	-
Low	950	930	900	860	810	750	-	-	-	-	-	-

ARI PERFORMANCE CERTIFIED™ ANSI/ARI/ASHRAE/ISO Standard 13256-1

c UL US

FLUID PRESSURE DROP

Fluid Flow	Pressure Drop	
(GPM)	(FOH)	(PSIG)
3	1.23	0.53
4.5	2.56	1.11
6	4.29	1.86
7.5	6.41	2.77
12	14.94	6.47

ISO 13256-1 CERTIFIED PERFORMANCE DATA Rated at 1,000 CFM and 7.5 GPM

Water Loop				Ground Water				Ground Loop			
Cooling		Heating		Cooling		Heating		Cooling		Heating	
Capacity	EER	Capacity	COP	Capacity	EER	Capacity	COP	Capacity	EER	Capacity	COP
30,000	15.5	33,500	4.7	34,500	24.0	27,500	4.1	31,000	18.0	22,000	3.4

CAPACITY DATA All performance at 1,000 CFM and 7.5 GPM

COOLING

EFT Range (Standard) 45°F to 110°F

Entering Fluid Temp. (°F)	Entering Air Temp. (°F)	Total Capacity (MBtuH)	Sensible Capacity (MBtuH)	Sensible to Total Ratio	Power Input (kW)	Heat of Reject (MBtuH)	EER
50°	70°db 61°wb	30.27	19.43	0.64	1.41	35.10	21.4
60°		28.85	18.67	0.65	1.59	34.29	18.1
70°		27.43	17.97	0.66	1.77	33.48	15.5
85°		25.29	17.00	0.67	2.04	32.26	12.4
100°		23.16	16.11	0.70	2.31	31.04	10.0
50°	75°db 63°wb	32.45	23.27	0.72	1.42	37.31	22.8
60°		30.93	22.37	0.72	1.60	36.40	19.3
70°		29.41	21.53	0.73	1.78	35.49	16.5
85°		27.12	20.38	0.75	2.05	34.12	13.2
100°		24.84	19.32	0.78	2.32	32.76	10.7
50°	80°db 67°wb	35.64	25.72	0.72	1.43	40.53	24.9
60°		33.97	24.72	0.73	1.61	39.48	21.1
70°		32.30	23.80	0.74	1.79	38.43	18.0
85°		29.80	22.53	0.76	2.07	36.85	14.4
100°		27.29	21.36	0.78	2.34	35.27	11.7
50°	85°db 71°wb	38.83	28.19	0.73	1.44	43.75	26.9
60°		37.01	27.09	0.73	1.63	42.56	22.8
70°		35.20	26.08	0.74	1.81	41.37	19.5
85°		32.47	24.70	0.76	2.08	39.58	15.6
100°		29.75	23.42	0.79	2.36	37.79	12.6

HEATING

EFT Range (Standard) 25°F to 80°F

Entering Fluid Temp. (°F)	Entering Air Temp. (°F)	Total Capacity (MBtuH)	Power Input (kW)	Heat of Abs. (MBtuH)	COP
50°	60°	29.75	2.12	22.52	4.1
60°		32.96	2.17	25.55	4.4
70°		36.17	2.22	28.58	4.8
80°		39.38	2.28	31.61	5.1
50°	70°	28.14	2.16	20.78	3.8
60°		31.17	2.21	23.64	4.1
70°		34.21	2.26	26.49	4.4
80°		37.24	2.32	29.34	4.7
50°	80°	26.26	2.20	18.74	3.5
60°		29.08	2.26	21.38	3.8
70°		31.90	2.31	24.02	4.0
80°		34.73	2.36	26.66	4.3

LOW TEMP HEATING

Antifreeze Required

25°	60°	21.30	1.99	14.51	3.1
30°		22.87	2.01	16.00	3.3
40°		26.02	2.07	18.97	3.7
25°	70°	20.16	2.02	13.26	2.9
30°		21.65	2.05	14.65	3.1
40°		24.62	2.10	17.44	3.4
25°	80°	18.82	2.07	11.77	2.7
30°		20.20	2.09	13.06	2.8
40°		22.97	2.15	15.64	3.1

Units are complete packages containing an R-410A compressor, reversing valve, expansion valve metering device, and heat exchangers. Also included are safety controls: Overload protection for motors, high and low refrigerant pressure switches and a solid state lock-out circuit. Optional UL approved internal electric heater, factory installed with primary thermal overload protection and magnetic contactors (208/230-1-60 only). Optional UL approved internal Heat Recovery Package and/or Ground Loop Pump with purge connections available.

Performance based on ARI/ISO rated air flow, fluid flow and voltage. For conditions other than rated, consult the FHP EAD selection software. Due to variations in installation actual performance may vary marginally from tabulated values.

As a result of continuing research and development, specifications are subject to change without notice.

EV030ip6 mod2 Rev: 10-06

FHP MANUFACTURING COMPANY
601 N.W. 65th Court - Fort Lauderdale, FL 33309
Phone: (954) 776-5471 - Fax: (800) 776-5529
http://www.fhp-mfg.com

PACKAGED UNITS
SPECIFICATION DATA SHEET

FHP MANUFACTURING HIGH-EFFICIENCY WATER SOURCE HEAT PUMPS

EV036

ENVIRO-MISER

ELECTRICAL SPECIFICATIONS

Electrical Characteristics	Elect. Symbol	Compressor		Blower		Loop Pump		Min. Circuit Amps	Max. Fuse/ Breaker
		RLA	LRA	FLA	HP	FLA	HP		
208/230-1-60	-1	14.8	72.5	3.9	1/2	-	-	24.6	35
265-1-60	-2	12.5	61.0	2.3	1/2	-	-	17.9	30
208/230-3-60	-3	10.4	35.0	3.9	1/2	-	-	16.9	25
460-3-60	-4	5.0	32.0	2.0	1/2	-	-	8.3	15

MECHANICAL SPECIFICATIONS

Refrigerant: R-410A			
Air Coil			
Square Feet	Rows Deep	Tube O.D.	Fins/ Inch
3.50	3	3/8	14
Water Coil			
Type		Work Press	
Coaxial		450 psig	
Blower Size		Compr Type	
9x7 DD		Scroll	
Net Weight		Ship Weight	
290 lbs		315 lbs	

BLOWER PERFORMANCE

Available External Static Pressure (Inches of Water, Gauge. Wet Coil and Filter Included)												
Blower Speed	0.10	0.20	0.30	0.40	0.50	0.60	0.70	0.80	0.90	1.00	1.10	1.20
High	1500	1440	1370	1290	1210	1120	1000	900	-	-	-	-
Medium	1410	1350	1290	1220	1150	1060	900	-	-	-	-	-
Low	1290	1250	1200	1150	1080	1000	-	-	-	-	-	-

ARI PERFORMANCE CERTIFIED™ ANSI/ARI/ASHRAE/ISO Standard 13256-1

c UL US

FLUID PRESSURE DROP

Fluid Flow	Pressure Drop	
(GPM)	(FOH)	(PSIG)
5	3.05	1.32
7	5.60	2.42
9	8.80	3.81
11	12.63	5.47
13	17.06	7.38

ISO 13256-1 CERTIFIED PERFORMANCE DATA Rated at 1,200 CFM and 9.0 GPM

Water Loop				Ground Water				Ground Loop			
Cooling		Heating		Cooling		Heating		Cooling		Heating	
Capacity	EER	Capacity	COP	Capacity	EER	Capacity	COP	Capacity	EER	Capacity	COP
33,000	14.8	39,000	5.0	38,500	22.6	31,500	4.3	34,000	17.4	24,000	3.4

CAPACITY DATA All performance at 1,200 CFM and 9.0 GPM

COOLING

EFT Range (Standard) 45°F to 110°F

Entering Fluid Temp. (°F)	Entering Air Temp. (°F)	Total Capacity (MBtuH)	Sensible Capacity (MBtuH)	Sensible to Total Ratio	Power Input (kW)	Heat of Reject (MBtuH)	EER
50°	70°db 61°wb	33.91	21.77	0.64	1.68	39.64	20.2
60°		32.15	20.81	0.65	1.88	38.55	17.1
70°		30.38	19.91	0.66	2.08	37.47	14.6
85°		27.74	18.65	0.67	2.37	35.84	11.7
100°		25.10	17.46	0.70	2.67	34.21	9.4
50°	75°db 63°wb	36.34	26.07	0.72	1.69	42.11	21.5
60°		34.46	24.92	0.72	1.89	40.90	18.3
70°		32.58	23.85	0.73	2.09	39.70	15.6
85°		29.75	22.36	0.75	2.38	37.89	12.5
100°		26.92	20.94	0.78	2.68	36.08	10.0
50°	80°db 67°wb	39.91	28.81	0.72	1.70	45.72	23.5
60°		37.85	27.54	0.73	1.90	44.34	19.9
70°		35.78	26.36	0.74	2.10	42.96	17.0
85°		32.68	24.71	0.76	2.40	40.88	13.6
100°		29.58	23.15	0.78	2.70	38.81	10.9
50°	85°db 71°wb	43.48	31.57	0.73	1.71	49.33	25.4
60°		41.23	30.19	0.73	1.92	47.77	21.5
70°		38.99	28.90	0.74	2.12	46.21	18.4
85°		35.62	27.09	0.76	2.42	43.88	14.7
100°		32.24	25.39	0.79	2.72	41.54	11.8

HEATING

EFT Range (Standard) 25°F to 80°F

Entering Fluid Temp. (°F)	Entering Air Temp. (°F)	Total Capacity (MBtuH)	Power Input (kW)	Heat of Abs. (MBtuH)	COP
50°	60°	33.82	2.30	25.98	4.3
60°		38.04	2.36	29.99	4.7
70°		42.25	2.42	34.01	5.1
80°		46.47	2.48	38.02	5.5
50°	70°	31.99	2.34	24.01	4.0
60°		35.97	2.40	27.79	4.4
70°		39.96	2.46	31.57	4.8
80°		43.94	2.52	35.34	5.1
50°	80°	29.84	2.39	21.70	3.7
60°		33.55	2.45	25.20	4.0
70°		37.26	2.51	28.69	4.3
80°		40.97	2.57	32.19	4.7

LOW TEMP HEATING

Antifreeze Required

25°	60°	22.82	2.15	15.49	3.1
30°		24.89	2.18	17.45	3.3
40°		29.02	2.24	21.39	3.8
25°	70°	21.60	2.19	14.14	2.9
30°		23.55	2.22	15.99	3.1
40°		27.46	2.28	19.69	3.5
25°	80°	20.16	2.23	12.55	2.6
30°		21.98	2.26	14.26	2.8
40°		25.62	2.32	17.69	3.2

Units are complete packages containing an R-410A compressor, reversing valve, expansion valve metering device, and heat exchangers. Also included are safety controls: Overload protection for motors, high and low refrigerant pressure switches and a solid state lock-out circuit. Optional UL approved internal electric heater, factory installed with primary thermal overload protection and magnetic contactors (208/230-1-60 only). Optional UL approved internal Heat Recovery Package and/or Ground Loop Pump with purge connections available.

Performance based on ARI/ISO rated air flow, fluid flow and voltage. For conditions other than rated, consult the FHP EAD selection software. Due to variations in installation actual performance may vary marginally from tabulated values.

As a result of continuing research and development, specifications are subject to change without notice.

EV036ip6 mod2 Rev: 10-06

FHP MANUFACTURING COMPANY
601 N.W. 65th Court - Fort Lauderdale, FL 33309
Phone: (954) 776-5471 - Fax: (800) 776-5529
http://www.fhp-mfg.com

PACKAGED UNITS
SPECIFICATION DATA SHEET

FHP MANUFACTURING HIGH-EFFICIENCY WATER SOURCE HEAT PUMPS

EV042

ENVIRO-MISER

ELECTRICAL SPECIFICATIONS

Electrical Characteristics	Elect. Symbol	Compressor		Blower		Loop Pump		Min. Circuit Amps	Max. Fuse/ Breaker
		RLA	LRA	FLA	HP	FLA	HP		
208/230-1-60	-1	18.6	105.0	3.9	1/2	-	-	29.3	40
208/230-3-60	-3	13.5	77.0	3.9	1/2	-	-	20.8	30
460-3-60	-4	6.5	39.0	2.0	1/2	-	-	10.2	15

MECHANICAL SPECIFICATIONS

Refrigerant: R-410A			
Air Coil			
Square Feet	Rows Deep	Tube O.D.	Fins/ Inch
4.50	3	3/8	14
Water Coil			
Type		Work Press	
Coaxial		450 psig	
Blower Size		Compr Type	
9x7 DD		Scroll	
Net Weight		Ship Weight	
312 lbs		342 lbs	

BLOWER PERFORMANCE

Available External Static Pressure (Inches of Water, Gauge. Wet Coil and Filter Included)

Blower Speed	0.10	0.20	0.30	0.40	0.50	0.60	0.70	0.80	0.90	1.00	1.10	1.20
High	-	1570	1500	1420	1330	1260	1190	1100	-	-	-	-
Medium	1560	1520	1450	1380	1290	1140	1000	-	-	-	-	-
Low	1380	1290	1200	1090	980	-	-	-	-	-	-	-

ARI PERFORMANCE CERTIFIED™ ANSI/ARI/ASHRAE/ISO Standard 13256-1

c UL US

FLUID PRESSURE DROP

Fluid Flow (GPM)	Pressure Drop (FOH)	Pressure Drop (PSIG)
5	1.98	0.86
7	3.63	1.57
9	5.70	2.47
13	11.05	4.78
15	14.30	6.19

ISO 13256-1 CERTIFIED PERFORMANCE DATA Rated at 1,400 CFM and 9.0 GPM

Water Loop				Ground Water				Ground Loop			
Cooling		Heating		Cooling		Heating		Cooling		Heating	
Capacity	EER	Capacity	COP	Capacity	EER	Capacity	COP	Capacity	EER	Capacity	COP
43,000	13.5	47,000	4.6	47,000	20.0	39,000	4.0	44,500	15.3	30,500	3.2

CAPACITY DATA All performance at 1,400 CFM and 9.0 GPM

COOLING

EFT Range (Standard) 45°F to 110°F

Entering Fluid Temp. (°F)	Entering Air Temp. (°F)	Total Capacity (MBtuH)	Sensible Capacity (MBtuH)	Sensible to Total Ratio	Power Input (kW)	Heat of Reject (MBtuH)	EER
50°	70°db 61°wb	40.90	26.64	0.65	2.23	48.51	18.3
60°		39.70	26.07	0.66	2.54	48.35	15.7
70°		38.50	25.60	0.67	2.84	48.20	13.5
85°		36.70	25.05	0.68	3.30	47.96	11.1
100°		34.90	24.66	0.71	3.76	47.72	9.3
50°	75°db 63°wb	43.83	31.88	0.73	2.24	51.49	19.5
60°		42.55	31.20	0.73	2.55	51.25	16.7
70°		41.26	30.64	0.74	2.86	51.01	14.4
85°		39.33	29.99	0.76	3.32	50.66	11.9
100°		37.41	29.52	0.79	3.78	50.30	9.9
50°	80°db 67°wb	48.12	35.21	0.73	2.26	55.84	21.3
60°		46.71	34.47	0.74	2.57	55.48	18.2
70°		45.31	33.85	0.75	2.88	55.13	15.7
85°		43.19	33.12	0.77	3.34	54.60	12.9
100°		41.08	32.61	0.79	3.81	54.08	10.8
50°	85°db 71°wb	52.41	38.57	0.74	2.28	60.18	23.0
60°		50.88	37.76	0.74	2.59	59.72	19.7
70°		49.35	37.08	0.75	2.90	59.25	17.0
85°		47.05	36.29	0.77	3.37	58.55	14.0
100°		44.75	35.73	0.80	3.84	57.85	11.7

HEATING

EFT Range (Standard) 25°F to 80°F

Entering Fluid Temp. (°F)	Entering Air Temp. (°F)	Total Capacity (MBtuH)	Power Input (kW)	Heat of Abs. (MBtuH)	COP
50°	60°	41.56	3.03	31.23	4.0
60°		46.17	3.08	35.66	4.4
70°		50.79	3.14	40.08	4.7
80°		55.40	3.19	44.51	5.1
50°	70°	39.30	3.08	28.79	3.7
60°		43.66	3.14	32.96	4.1
70°		48.02	3.19	37.13	4.4
80°		52.38	3.25	41.30	4.7
50°	80°	36.65	3.15	25.92	3.4
60°		40.71	3.20	29.78	3.7
70°		44.77	3.26	33.64	4.0
80°		48.83	3.32	37.51	4.3

LOW TEMP HEATING

Antifreeze Required

25°	60°	29.43	2.89	19.58	3.0
30°		31.69	2.92	21.74	3.2
40°		36.22	2.97	26.08	3.6
25°	70°	27.85	2.94	17.81	2.8
30°		29.98	2.97	19.86	3.0
40°		34.26	3.02	23.94	3.3
25°	80°	25.99	3.00	15.74	2.5
30°		27.98	3.03	17.63	2.7
40°		31.96	3.09	21.41	3.0

Units are complete packages containing an R-410A compressor, reversing valve, expansion valve metering device, and heat exchangers. Also included are safety controls: Overload protection for motors, high and low refrigerant pressure switches and a solid state lock-out circuit. Optional UL approved internal electric heater, factory installed with primary thermal overload protection and magnetic contactors (208/230-1-60 only). Optional UL approved internal Heat Recovery Package and/or Ground Loop Pump with purge connections available.

Performance based on ARI/ISO rated air flow, fluid flow and voltage. For conditions other than rated, consult the FHP EAD selection software. Due to variations in installation actual performance may vary marginally from tabulated values.

As a result of continuing research and development, specifications are subject to change without notice.

EV042ip6 mod2 Rev: 10-06

FHP MANUFACTURING COMPANY
601 N.W. 65th Court - Fort Lauderdale, FL 33309
Phone: (954) 776-5471 - Fax: (800) 776-5529
http://www.fhp-mfg.com

PACKAGED UNITS
SPECIFICATION DATA SHEET

FHP MANUFACTURING HIGH-EFFICIENCY WATER SOURCE HEAT PUMPS

EV048

ENVIRO-MISER

ELECTRICAL SPECIFICATIONS

Electrical Characteristics	Elect. Symbol	Compressor		Blower		Loop Pump		Min. Circuit Amps	Max. Fuse/ Breaker
		RLA	LRA	FLA	HP	FLA	HP		
208/230-1-60	-1	20.6	109.0	3.9	1/2	-	-	31.8	50
208/230-3-60	-3	14.6	91.0	3.9	1/2	-	-	22.2	35
460-3-60	-4	7.1	46.0	2.0	1/2	-	-	10.9	15

MECHANICAL SPECIFICATIONS

Refrigerant: R-410A			
Air Coil			
Square Feet	Rows Deep	Tube O.D.	Fins/ Inch
4.50	3	3/8	14
Water Coil			
Type		Work Press	
Coaxial		450 psig	
Blower Size		Compr Type	
10x8 DD		Scroll	
Net Weight		Ship Weight	
318 lbs		348 lbs	

BLOWER PERFORMANCE

Available External Static Pressure (Inches of Water, Gauge. Wet Coil and Filter Included)

Blower Speed	0.10	0.20	0.30	0.40	0.50	0.60	0.70	0.80	0.90	1.00	1.10	1.20
High	-	1770	1700	1620	1530	1460	1390	1300	1210	-	-	-
Medium	1760	1720	1650	1580	1490	1340	1200	-	-	-	-	-
Low	1580	1490	1400	1290	1180	-	-	-	-	-	-	-

ARI PERFORMANCE CERTIFIED™ ANSI/ARI/ASHRAE/ISO Standard 13256-1

c UL US

FLUID PRESSURE DROP

Fluid Flow (GPM)	Pressure Drop (FOH)	(PSIG)
6	2.93	1.27
7	3.87	1.67
9.5	6.70	2.90
12	10.20	4.42
16	17.12	7.41

ISO 13256-1 CERTIFIED PERFORMANCE DATA Rated at 1,600 CFM and 12.0 GPM

Water Loop				Ground Water				Ground Loop			
Cooling		Heating		Cooling		Heating		Cooling		Heating	
Capacity	EER	Capacity	COP	Capacity	EER	Capacity	COP	Capacity	EER	Capacity	COP
48,500	13.6	58,000	4.8	55,000	20.6	47,000	4.2	49,000	16.4	37,500	3.4

CAPACITY DATA All performance at 1,600 CFM and 12.0 GPM

COOLING

EFT Range (Standard) 45°F to 110°F

Entering Fluid Temp. (°F)	Entering Air Temp. (°F)	Total Capacity (MBtuH)	Sensible Capacity (MBtuH)	Sensible to Total Ratio	Power Input (kW)	Heat of Reject (MBtuH)	EER
50°	70°db 61°wb	48.30	31.44	0.65	2.62	57.25	18.4
60°		45.85	30.08	0.66	2.91	55.77	15.8
70°		43.39	28.82	0.66	3.20	54.29	13.6
85°		39.70	27.06	0.68	3.62	52.07	11.0
100°		36.02	25.40	0.71	4.05	49.85	8.9
50°	75°db 63°wb	51.77	37.63	0.73	2.64	60.77	19.6
60°		49.14	36.01	0.73	2.92	59.12	16.8
70°		46.51	34.51	0.74	3.21	57.48	14.5
85°		42.57	32.42	0.76	3.64	55.01	11.7
100°		38.62	30.44	0.79	4.08	52.54	9.5
50°	80°db 67°wb	56.85	41.57	0.73	2.66	65.91	21.4
60°		53.96	39.79	0.74	2.95	64.02	18.3
70°		51.08	38.13	0.75	3.24	62.13	15.8
85°		46.76	35.82	0.77	3.67	59.29	12.7
100°		42.43	33.65	0.79	4.11	56.45	10.3
50°	85°db 71°wb	61.92	45.55	0.74	2.68	71.05	23.1
60°		58.79	43.60	0.74	2.97	68.92	19.8
70°		55.65	41.79	0.75	3.26	66.78	17.1
85°		50.95	39.27	0.77	3.70	63.58	13.8
100°		46.24	36.88	0.80	4.14	60.37	11.2

HEATING

EFT Range (Standard) 25°F to 80°F

Entering Fluid Temp. (°F)	Entering Air Temp. (°F)	Total Capacity (MBtuH)	Power Input (kW)	Heat of Abs. (MBtuH)	COP
50°	60°	50.88	3.51	38.91	4.3
60°		56.62	3.59	44.36	4.6
70°		62.35	3.68	49.81	5.0
80°		68.09	3.76	55.25	5.3
50°	70°	48.12	3.57	35.94	4.0
60°		53.54	3.65	41.07	4.3
70°		58.96	3.74	46.19	4.6
80°		64.38	3.83	51.32	4.9
50°	80°	44.88	3.64	32.44	3.6
60°		49.93	3.73	37.19	3.9
70°		54.98	3.82	41.93	4.2
80°		60.02	3.91	46.68	4.5

LOW TEMP HEATING

Antifreeze Required

25°	60°	35.83	3.30	24.58	3.2
30°		38.64	3.34	27.25	3.4
40°		44.26	3.42	32.58	3.8
25°	70°	33.90	3.35	22.45	3.0
30°		36.55	3.40	24.96	3.2
40°		41.87	3.48	29.98	3.5
25°	80°	31.64	3.42	19.95	2.7
30°		34.11	3.47	22.27	2.9
40°		39.06	3.56	26.92	3.2

Units are complete packages containing an R-410A compressor, reversing valve, expansion valve metering device, and heat exchangers. Also included are safety controls: Overload protection for motors, high and low refrigerant pressure switches and a solid state lock-out circuit. Optional UL approved internal electric heater, factory installed with primary thermal overload protection and magnetic contactors (208/230-1-60 only). Optional UL approved internal Heat Recovery Package and/or Ground Loop Pump with purge connections available.

Performance based on ARI/ISO rated air flow, fluid flow and voltage. For conditions other than rated, consult the FHP EAD selection software. Due to variations in installation actual performance may vary marginally from tabulated values.

As a result of continuing research and development, specifications are subject to change without notice.

EV048ip6 mod2 Rev: 10-06

FHP MANUFACTURING COMPANY
601 N.W. 65th Court - Fort Lauderdale, FL 33309
Phone: (954) 776-5471 - Fax: (800) 776-5529
http://www.fhp-mfg.com

PACKAGED UNITS
SPECIFICATION DATA SHEET

FHP MANUFACTURING HIGH-EFFICIENCY WATER SOURCE HEAT PUMPS

EV060

ENVIRO-MISER

ELECTRICAL SPECIFICATIONS

Electrical Characteristics	Elect. Symbol	Compressor		Blower		Loop Pump		Min. Circuit Amps	Max. Fuse/ Breaker
		RLA	LRA	FLA	HP	FLA	HP		
208/230-1-60	-1	27.6	158.0	5.0	3/4	-	-	41.7	60
208/230-3-60	-3	18.1	137.0	5.0	3/4	-	-	27.7	40
460-3-60	-4	9.0	62.0	2.5	3/4	-	-	13.8	20

MECHANICAL SPECIFICATIONS

Refrigerant: R-410A			
Air Coil			
Square Feet	Rows Deep	Tube O.D.	Fins/ Inch
4.50	3	3/8	14
Water Coil			
Type		Work Press	
Coaxial		450 psig	
Blower Size		Compr Type	
11x9 DD		Scroll	
Net Weight		Ship Weight	
390 lbs		415 lbs	

BLOWER PERFORMANCE

Available External Static Pressure (Inches of Water, Gauge. Wet Coil and Filter Included)												
Blower Speed	0.10	0.20	0.30	0.40	0.50	0.60	0.70	0.80	0.90	1.00	1.10	1.20
High	2160	2100	2030	1950	1870	1800	1730	1680	1640	1600	1550	1500
Medium	2110	2050	1990	1900	1820	1750	1690	1650	1600	1550	-	-
Low	2060	2000	1950	1850	1760	1700	1640	1580	-	-	-	-

ARI PERFORMANCE CERTIFIED™ ANSI/ARI/ASHRAE/ISO Standard 13256-1

c UL US

FLUID PRESSURE DROP

Fluid Flow	Pressure Drop	
(GPM)	(FOH)	(PSIG)
8	3.48	1.51
12	7.23	3.13
16	12.13	5.25
18	14.99	6.49
22	21.52	9.32

ISO 13256-1 CERTIFIED PERFORMANCE DATA Rated at 2,000 CFM and 12.0 GPM

Water Loop				Ground Water				Ground Loop			
Cooling		Heating		Cooling		Heating		Cooling		Heating	
Capacity	EER	Capacity	COP	Capacity	EER	Capacity	COP	Capacity	EER	Capacity	COP
57,500	13.0	66,000	4.3	68,000	19.2	56,000	3.8	60,000	15.0	45,000	3.2

CAPACITY DATA All performance at 2,000 CFM and 12.0 GPM

COOLING

EFT Range (Standard) 45°F to 110°F

Entering Fluid Temp. (°F)	Entering Air Temp. (°F)	Total Capacity (MBtuH)	Sensible Capacity (MBtuH)	Sensible to Total Ratio	Power Input (kW)	Heat of Reject (MBtuH)	EER
50°	70°db 61°wb	60.64	39.11	0.64	2.74	70.00	22.1
60°		57.32	37.27	0.65	3.25	68.40	17.7
70°		53.99	35.54	0.66	3.75	66.80	14.4
85°		49.01	33.10	0.68	4.51	64.39	10.9
100°		44.02	30.76	0.70	5.27	61.99	8.4
50°	75°db 63°wb	64.97	46.75	0.72	2.76	74.38	23.6
60°		61.41	44.55	0.73	3.26	72.55	18.8
70°		57.85	42.49	0.73	3.77	70.73	15.3
85°		52.51	39.58	0.75	4.53	67.99	11.6
100°		47.17	36.79	0.78	5.30	65.25	8.9
50°	80°db 67°wb	71.30	51.60	0.72	2.78	80.78	25.7
60°		67.40	49.18	0.73	3.29	78.63	20.5
70°		63.50	46.91	0.74	3.80	76.47	16.7
85°		57.64	43.70	0.76	4.57	73.24	12.6
100°		51.79	40.63	0.78	5.34	70.01	9.7
50°	85°db 71°wb	77.63	56.50	0.73	2.80	87.19	27.7
60°		73.39	53.86	0.73	3.32	84.70	22.1
70°		69.14	51.37	0.74	3.83	82.22	18.0
85°		62.78	47.87	0.76	4.61	78.50	13.6
100°		56.41	44.51	0.79	5.38	74.77	10.5

HEATING

EFT Range (Standard) 25°F to 80°F

Entering Fluid Temp. (°F)	Entering Air Temp. (°F)	Total Capacity (MBtuH)	Power Input (kW)	Heat of Abs. (MBtuH)	COP
50°	60°	59.32	4.43	44.20	3.9
60°		65.15	4.53	49.68	4.2
70°		70.98	4.63	55.16	4.5
80°		76.81	4.74	60.64	4.8
50°	70°	56.08	4.51	40.69	3.6
60°		61.59	4.61	45.84	3.9
70°		67.10	4.72	50.99	4.2
80°		72.61	4.82	56.15	4.4
50°	80°	52.29	4.61	36.55	3.3
60°		57.42	4.72	41.32	3.6
70°		62.55	4.82	46.08	3.8
80°		67.68	4.93	50.85	4.0

LOW TEMP HEATING

Antifreeze Required

25°	60°	43.86	4.17	29.62	3.1
30°		46.72	4.22	32.30	3.2
40°		52.44	4.33	37.67	3.6
25°	70°	41.48	4.25	26.98	2.9
30°		44.18	4.30	29.50	3.0
40°		49.58	4.41	34.55	3.3
25°	80°	38.68	4.34	23.87	2.6
30°		41.20	4.40	26.20	2.7
40°		46.23	4.50	30.86	3.0

Units are complete packages containing an R-410A compressor, reversing valve, expansion valve metering device, and heat exchangers. Also included are safety controls: Overload protection for motors, high and low refrigerant pressure switches and a solid state lock-out circuit. Optional UL approved internal electric heater, factory installed with primary thermal overload protection and magnetic contactors (208/230-1-60 only). Optional UL approved internal Heat Recovery Package and/or Ground Loop Pump with purge connections available.

Performance based on ARI/ISO rated air flow, fluid flow and voltage. For conditions other than rated, consult the FHP EAD selection software. Due to variations in installation actual performance may vary marginally from tabulated values.

As a result of continuing research and development, specifications are subject to change without notice.

EV060ip6 mod2 Rev: 10-06

FHP MANUFACTURING COMPANY
601 N.W. 65th Court - Fort Lauderdale, FL 33309
Phone: (954) 776-5471 - Fax: (800) 776-5529
http://www.fhp-mfg.com

PACKAGED UNITS
SPECIFICATION DATA SHEET

FHP MANUFACTURING HIGH-EFFICIENCY WATER SOURCE HEAT PUMPS

EV070

ENVIRO-MISER

ELECTRICAL SPECIFICATIONS

Electrical Characteristics	Elect. Symbol	Compressor		Blower		Loop Pump		Min. Circuit Amps	Max. Fuse/ Breaker
		RLA	LRA	FLA	HP	FLA	HP		
208/230-1-60	-1	28.8	169.0	5.0	3/4	-	-	42.8	70
208/230-3-60	-3	19.3	129.0	5.0	3/4	-	-	29.1	40
460-3-60	-4	9.7	75	2.5	3/4	-	-	14.7	20

MECHANICAL SPECIFICATIONS

Refrigerant: R-410A			
Air Coil			
Square Feet	Rows Deep	Tube O.D.	Fins/ Inch
6.00	3	3/8	14
Water Coil			
Type		Work Press	
Coaxial		450 psig	
Blower Size		Compr Type	
11x9 DD		Scroll	
Net Weight		Ship Weight	
450 lbs		495 lbs	

BLOWER PERFORMANCE

Available External Static Pressure (Inches of Water, Gauge. Wet Coil and Filter Included)												
Blower Speed	0.10	0.20	0.30	0.40	0.50	0.60	0.70	0.80	0.90	1.00	1.10	1.20
High	2260	2230	2200	2180	2140	2090	2040	1980	1920	1850	1790	1730
Medium	1990	1960	1940	1930	1910	1880	1840	1800	1750	1700	1650	-
Low	1720	1690	1680	1670	1660	1650	1630	1610	1580	1550	-	-

ARI PERFORMANCE CERTIFIED ANSI/ARI/ASHRAE/ISO Standard 13256-1

c UL US

FLUID PRESSURE DROP

Fluid Flow (GPM)	Pressure Drop (FOH)	Pressure Drop (PSIG)
10	6.39	2.77
14	11.72	5.07
16	14.90	6.45
18	18.42	7.97
20	22.27	9.64

ISO 13256-1 CERTIFIED PERFORMANCE DATA Rated at 2,200 CFM and 16.0 GPM

Water Loop				Ground Water				Ground Loop			
Cooling		Heating		Cooling		Heating		Cooling		Heating	
Capacity	EER	Capacity	COP	Capacity	EER	Capacity	COP	Capacity	EER	Capacity	COP
68,000	13.5	80,000	4.5	76,000	19.8	68,000	4.0	70,000	15.2	53,000	3.2

CAPACITY DATA All performance at 2,200 CFM and 16.0 GPM

COOLING

EFT Range (Standard) 45°F to 110°F

Entering Fluid Temp. (°F)	Entering Air Temp. (°F)	Total Capacity (MBtuH)	Sensible Capacity (MBtuH)	Sensible to Total Ratio	Power Input (kW)	Heat of Reject (MBtuH)	EER
50°	70°db 61°wb	66.78	43.62	0.65	3.50	78.72	19.1
60°		64.29	42.34	0.66	3.93	77.71	16.3
70°		61.79	41.20	0.67	4.37	76.70	14.1
85°		58.05	39.72	0.68	5.02	75.19	11.6
100°		54.31	38.46	0.71	5.67	73.67	9.6
50°	75°db 63°wb	71.55	52.12	0.73	3.52	83.55	20.3
60°		68.88	50.60	0.73	3.95	82.38	17.4
70°		66.21	49.25	0.74	4.39	81.20	15.1
85°		62.20	47.49	0.76	5.05	79.43	12.3
100°		58.19	45.98	0.79	5.71	77.67	10.2
50°	80°db 67°wb	78.52	57.54	0.73	3.54	90.62	22.2
60°		75.59	55.85	0.74	3.99	89.19	19.0
70°		72.66	54.36	0.75	4.43	87.77	16.4
85°		68.27	52.43	0.77	5.09	85.64	13.4
100°		63.88	50.77	0.79	5.75	83.51	11.1
50°	85°db 71°wb	85.49	63.00	0.74	3.57	97.68	23.9
60°		82.31	61.16	0.74	4.02	96.01	20.5
70°		79.12	59.53	0.75	4.46	94.35	17.7
85°		74.34	57.42	0.77	5.13	91.85	14.5
100°		69.57	55.60	0.80	5.80	89.35	12.0

HEATING

EFT Range (Standard) 25°F to 80°F

Entering Fluid Temp. (°F)	Entering Air Temp. (°F)	Total Capacity (MBtuH)	Power Input (kW)	Heat of Abs. (MBtuH)	COP
50°	60°	71.29	5.05	54.06	4.1
60°		78.83	5.15	61.26	4.5
70°		86.36	5.25	68.46	4.8
80°		93.89	5.34	75.66	5.1
50°	70°	67.40	5.14	49.85	3.8
60°		74.52	5.24	56.63	4.2
70°		81.64	5.34	63.41	4.5
80°		88.75	5.44	70.18	4.8
50°	80°	62.83	5.26	44.89	3.5
60°		69.46	5.36	51.17	3.8
70°		76.09	5.46	57.46	4.1
80°		82.72	5.56	63.74	4.4

LOW TEMP HEATING

Antifreeze Required

25°	60°	51.43	4.81	35.03	3.1
30°		55.13	4.86	38.55	3.3
40°		62.51	4.95	45.61	3.7
25°	70°	48.64	4.89	31.93	2.9
30°		52.13	4.94	35.25	3.1
40°		59.10	5.04	41.89	3.4
25°	80°	45.36	5.00	28.28	2.7
30°		48.61	5.05	31.36	2.8
40°		55.10	5.15	37.51	3.1

Units are complete packages containing an R-410A compressor, reversing valve, expansion valve metering device, and heat exchangers. Also included are safety controls: Overload protection for motors, high and low refrigerant pressure switches and a solid state lock-out circuit. Optional UL approved internal electric heater, factory installed with primary thermal overload protection and magnetic contactors (208/230-1-60 only). Optional UL approved internal Heat Recovery Package and/or Ground Loop Pump with purge connections available.

Performance based on ARI/ISO rated air flow, fluid flow and voltage. For conditions other than rated, consult the FHP EAD selection software. Due to variations in installation actual performance may vary marginally from tabulated values.

As a result of continuing research and development, specifications are subject to change without notice.

EV070ip6 mod2 Rev: 5-05

FHP MANUFACTURING COMPANY
601 N.W. 65th Court - Fort Lauderdale, FL 33309
Phone: (954) 776-5471 - Fax: (800) 776-5529
http://www.fhp-mfg.com